Precision in manual work:

Moving measuring systems manually with domiLINE from IEF-Werner

Press contact

IEF-Werner GmbH
Stefanie Günter
Wendelhofstr. 6
78120 Furtwangen
Tel. +49 7723/925-118
stefanie.guenter@ief-werner.de
www.ief.de

Agency

a1kommunikation Schweizer GmbH
Dr. Matthias Schweizer
Tel. +49 711/9454161-0
info@a1kommunikation.de
www.a1kommunikation.de

Publication free of charge – file copy requested.

Moving measuring systems manually with domiLINE from IEF-Werner

Precision in manual work

IEF-Werner GmbH offers the domiLINE adjustment unit, a proven adjustment slide which can be used, for example, to manually move measuring systems to any possible position. The unit has a modular design and is easy to convert. If a rotary movement is also required, IEF-Werner supplies the MDV manual rotary adjustment units.

Furtwangen, 30.03.2021 –- There are tasks that can be solved very efficiently manually. A typical case: In a palletising system, a camera has to record the exact position of the component. If the product is changed, the image sensor has to be readjusted by the operator. For these and similar tasks, IEF-Werner offered the proven domiLINE series for years. In this manual adjustment unit, a precise steel spindle with ball bearings in an end plate and a low-backlash, pre-tensioned plastic nut moves the guide system. The exact positioning is done with a rotary knob or a hand wheel. The knob is ribbed and - as the handwheel - has a scale. The unit can be mounted flexibly in all positions.

The domiLINE adjustment unit has a modular design and can be easily converted. With slide widths of 30, 50, 80 and 120 millimetres, the user is very flexible. The smallest version, for example, is available from stock with four different strokes from five to 20 millimetres, the largest from 25 to 100 millimetres. Other strokes can also be realised according to customer requirements. The spindle pitches for the individual sizes are between 0.5 and two millimetres. Measuring systems, such as the camera mentioned at the beginning, can thus be set in any possible position. The user can position each slide precisely manually and fix it from the side with a clamping lever. The slide can also be clamped directly to the spindle. For this purpose, the mounting is slotted and can be tightened with a clamping lever, for example - and so tightly that the spindle can no longer move. In addition, the adjustment slides can be easily combined with special fixing elements without having to screw the individual elements together. Any axis configuration is possible - for example X-Y, X-Z, X-Y-Z or even X-Y-Y-Y. IEF-Werner offers special X-Z or X-Y connection sets as accessories.

The user can not only connect slides to each other, but also to manual turning units. For this purpose, IEF-Werner has the MDV series in its range, which is available in four sizes. The smallest version has a diameter of 55 millimetres, the largest a rectangular cross-section of 100 x 140 millimetres. The backlash of the worm gearing is adjustable and already optimally reduced to a minimum at the factory. For the user, this means an even higher repeat accuracy in positioning.

Local court: Freiburg | General Manager: Stefan Deck, Manfred Meyer | Trace register: HRB 611072

In addition, the spindle of the MDV 80/100 and MDV 100/140 is counter-bearing mounted. This allows the unit to absorb relatively high torques and loads. As with the domiLINE, the exact positioning is done optionally with a rotary knob or a handwheel. The spindle can also be fixed in any position via a retrofittable clamping mechanism.

Both the adjustment unit and the rotary unit are available with a mechanical or electronic position indicator on request. If required, IEF-Werner also equips the system with a bus interface. This allows the units to transmit their own position, thus simplifying work when positions change frequently. The flexible shafts are also useful accessories. These transmit the movements of the manual adjuster around every corner, at a distance of up to 1.5 metres. For more information, see: www.ief.de/produkte/komponenten/manuelle-versteller/standardversteller/

3.654 characters (incl. blanks)

Meta-Title: IEF-Werner: Moving manually and precisely with domiLINE measuring systems

Meta-Description: The manual adjustment unit from IEF-Werner has a modular design and is easy to convert. The individual slides can be combined for all axis configurations - as well as equipped with a manual rotary adjustment unit.

Keywords: IEF-Werner; domiLINE; adjustment uni; manually; measuring system; rotary adjustment unit

Local court: Freiburg | General Manager: Stefan Deck, Manfred Meyer | Trace register: HRB 611072

Captions:

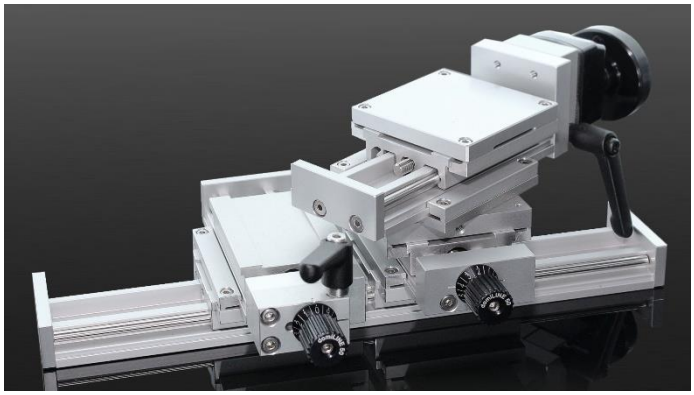

Picture 1: The user can easily combine the adjustment slides without having to screw the individual elements together.

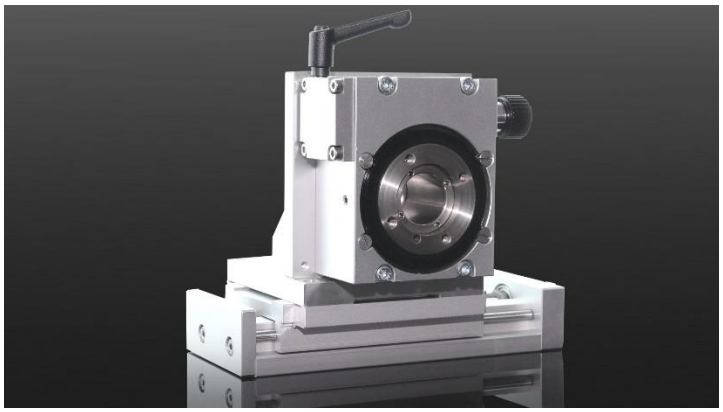

Picture 2: The user can not only connect slides to each other, but also to manual turning units.

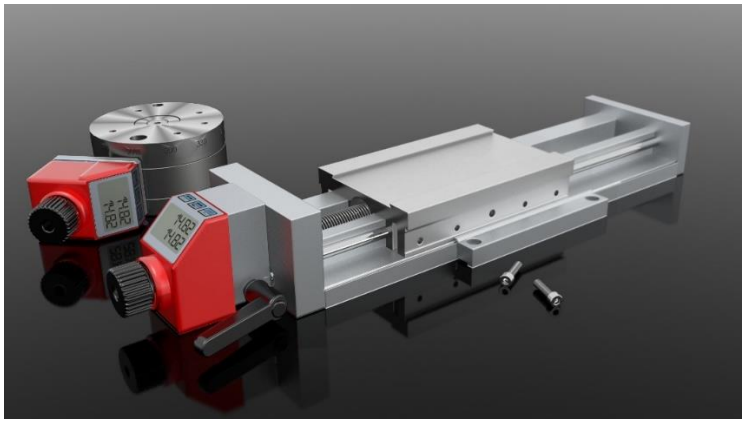

Picture 3: Both the adjustment unit and the turning unit can be supplied with a mechanical or electronic position indicator on request.

Images: IEF-Werner GmbH

Local court: Freiburg | General Manager: Stefan Deck, Manfred Meyer | Trace register: HRB 611072