Assembly instructions (original)

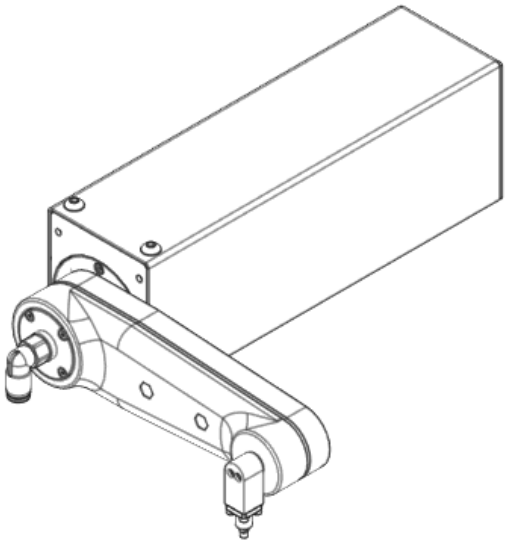

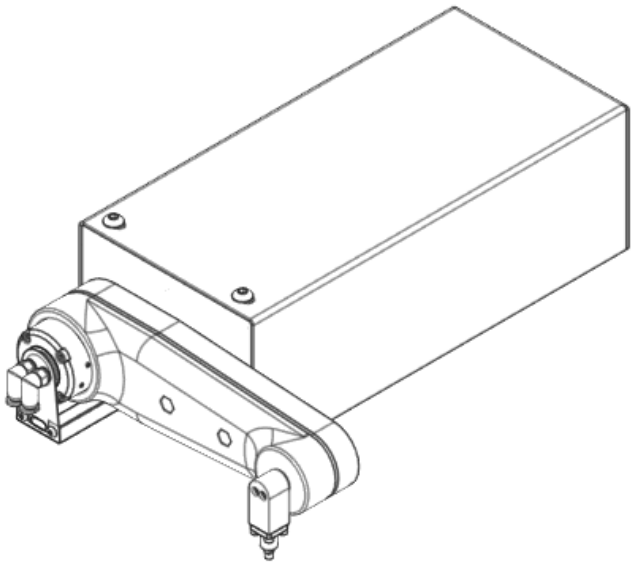

Swivel drive
miniSPIN
1416190

This documentation is intended only for the operating company and its personnel. The copyright of this documentation is owned by IEF-Werner GmbH. The content (texts, figures, drawings, graphics, plans, etc.) may not be reproduced or distributed, as a whole or in part, in printed or electronic form, without our prior written consent. This also applies to the unauthorized use for competition purposes or handing over and making accessible to third parties. All drawings, sketches and figures are the property of IEF-Werner GmbH. All rights reserved. Subject to change without notice.

IEF-Werner GmbH
Wendelhofstraße 6
Germany-78120 Furtwangen
Telephone: +49 7723-925-0
info@ief-werner.de

Table of contents

1 About this manual 4

1.1 General information 4

1.2 Customer service department 4

1.3 Change history 4

1.4 Other applicable documents 4

1.5 Presentation of information 5

2 Basic safety instructions 6

2.1 Safety markings (pictograms and stickers) 6

2.2 Obligations of the operating company / manufacturer 6

2.3 Target groups and personnel qualifications 6

2.4 Intended use 7

2.5 Residual risks 8

3 Description 9

3.1 Overview 9

3.1.1 Exploded-view drawing 10

3.1.2 Dimensions and fixing points 12

3.2 Blowing air or vacuum flow 13

3.3 Technical data and ambient conditions 13

3.4 Scope of delivery and accessories 14

3.5 Type code 14

4 Transport 15

5 Installation 16

5.1 Mechanical assembly 16

5.2 Connecting electrically and pneumatically 17

6 Commissioning 18

7 Maintenance 19

7.1 Spare parts and wear parts 19

7.2 Preparing the product for maintenance tasks 19

8 Fault rectification 20

9 Dismantling and disposal 21

10 Declaration of Incorporation 22

11 UKCA Declaration of incorporation 25

1 About this manual

1.1 General information

This manual is part of the machine/product and provides information concerning safe handling. The manual must therefore be kept on hand for the entire life cycle and must be accessible at all times.

The manual must be read, understood and complied with in all respects by all persons who work on and with the machine/product and who are responsible for the machine/product.

The illustrations are intended to clarify the content and may therefore deviate from reality.

1.2 Customer service department

In case of questions or problems, please contact our customer service:

IEF-Werner GmbH

Wendelhofstr. 6, 78120 Furtwangen, Germany

Telephone: +49 7723 / 925 - 222**,** E-mail: service@ief-werner.de

1.3 Change history

Version	Date	Changes
R1b	September 2018	Addition of gear ratios (lever/press sleeve) in section 5.4.1: Technical data for the miniSPIN series, page 27.
2	October 2022	Complete revision

1.4 Other applicable documents

In addition to this document, the following apply:

- the specific spare and wear parts list enclosed with the product.
- the models, parts lists and drawings from the download area of IEF-Werner GmbH (www.ief.de)
- the documentation of the installed supplier components.

1.5 Presentation of information

Safety instructions

Safety instructions warn of dangerous situations. Depending on the severity of the hazard, safety instructions contain different signal words.
Safety instructions are structured as follows:

Danger symbol and signal word	Meaning
DANGER	Indicates a dangerous situation in which death or serious bodily injury will occur, if the hazard prevention measures are not observed.
WARNING	Indicates a dangerous situation in which death or serious bodily injury may occur, if the hazard prevention measures are not observed.
CAUTION	Indicates a dangerous situation in which minor to moderate bodily injury may occur, if the hazard prevention measures are not observed.
NOTE	Indicates a situation in which damage to property (product/environment) may occur if the hazard prevention measures are not observed.

Pictograms

The pictograms and safety markings used are explained in the following chapter: Safety markings (pictograms and stickers) [▸ 6].

Symbols

Element / Symbol	Description
	Designates information and helpful tips.
■ ...	Designates bullet points.
✓	Designates prerequisites for instructions.
▶ ...	Designates instructions.
⇨ ...	Designates results of instructions.

2 Basic safety instructions

2.1 Safety markings (pictograms and stickers)

Dangers due to illegible safety markings

- Removed or illegible safety markings (e.g. due to soiling or damage) lead to a high hazard potential and must be replaced immediately.

Pictogram	Description	Position
	Warning – hand injuries or danger of crushing!	Instructions
	Warning – electrical voltage!	Electric drives
	Warning – hot surface!	Electric drives

2.2 Obligations of the operating company / manufacturer

Ensure that

- the machine/product is only operated in technically faultless condition.
- damage, irregularities and faults are rectified immediately.
- the machine/product is only operated under the specified ambient conditions (see Intended use [▶ 7]) and within the specified capacity limits, connected loads and settings (see Technical data and ambient conditions [▶ 13]).
- markings on the product are taken into account.
- damaged safety markings, or those that have become illegible, must be replaced immediately, see Safety markings (pictograms and stickers) [▶ 6].

2.3 Target groups and personnel qualifications

This manual is intended for the operating company and all persons who work on and with the machine / product and are responsible for the machine / product. The operating company is the company in which the machine / product is set up and operated. The following table lists the qualifications required for the various tasks. In addition to the table, observe the information on personnel qualification in the individual chapters of this manual.

Group of people	Qualifications	Tasks
Specialists	The specialist is able to carry out tasks on the machine/product due to his/her professional training, knowledge and experience. The specialist is specially trained for the environment in which he/she works and is familiar with the relevant standards	Transport, assembly, commissioning, servicing, maintenance, troubleshooting, disassembly

Group of people	Qualifications	Tasks
	and regulations. The specialist can also recognise and avoid possible dangers on his/her own. An example of a specialist is an electrician.	

Tab. 1: Personnel qualifications

2.4 Intended use

This incomplete machine is only intended to be installed in or joined together with other (incomplete) machines or equipment in order to form, together with other machines or equipment, a complete machine within the meaning of the Machinery Directive. Only after a conformity assessment procedure, in accordance with the Machinery Directive, has been carried out for the complete machine, may it be put into operation.

The operating company (manufacturer of the complete machine) must ensure that any danger zones still present are made safe and that the basic health and safety requirements are applied (For details see the supplied declaration of incorporation).

Function

miniSPINs are used for the rotary positioning of workpieces and fixtures around a fixed centre point. The press sleeve is rigid (passive) or rotating (active). miniSPINs are controlled via control electronics.

The permissible installation position is horizontal.

Personnel qualifications

See Target groups and personnel qualifications [▸ 6].

Environment

- The component may only be used for commercial use. It is not suitable for operation in potentially explosive or chemically aggressive areas. Dust loads must also be avoided.
- Operation is only permitted in industrial buildings, on sufficiently load-bearing surfaces and in accordance with the defined ambient conditions (see Technical data and ambient conditions [▸ 13]).
- Only motors approved for the specific application (travel speed, acceleration, load) by IEF-Werner GmbH may be fitted. If you have any questions, contact the IEF-Werner GmbH service.

Non-intended use

Any use beyond the intended use or any other use is considered misuse. Misuse includes:

- Failure to perform maintenance, service and repair measures.
- Failure to comply with the specified energy supply.
- Component must not be put into operation without additional protective or control measures.

- Component must not be used for transporting people and/or animals.
- Component must not be used in vehicles.
- Components must not come into direct contact with food.

2.5 Residual risks

Life-phase	Risk and avoidance	
Operation	Danger of crushing due to rotational movement of the swivel arm and/or the actuator. ▶ Protect the movement range from tampering. ▶ Keep the movement range free of foreign objects. ▶ Install appropriate protective devices (e.g. movable guards).	
Operation; maintenance, troubleshooting; disassembly	Risk of burns due to hot surfaces! Motor housing can heat up and cause burns when touched. ▶ Let the motor housing cool down before touching it (e.g. for maintenance tasks).	
Maintenance, troubleshooting; disassembly	Danger due to electrical voltage! ▶ De-energise the machine before maintenance work and secure it from being switched on again.	

Tab. 2: Residual risks

3 Description

3.1 Overview

The miniSPIN is used to position “small parts”.

Depending on the version, the miniSPIN has 1 or 2 motors, a single or double rotary feed-through and a suction cup or gripper.
For the single-movement variant (NC swivel axis, passive rotary axis) one motor is needed, for the double-movement variant (NC swivel axis, NC rotary axis) 2 motors are needed.
A single rotary feed-through is required for the suction cup, the double rotary feed-through for the gripper.

Video on how it works: https://youtu.be/HpjZDNbP6CE

	Swivel axis	Actuator	Motor
NC swivel axis, passive rotary axis	Pivots 180°	Rigid	1 motor
NC swivel axis, NC rotary axis	Pivots 180°	Pivots 360°	2 motors

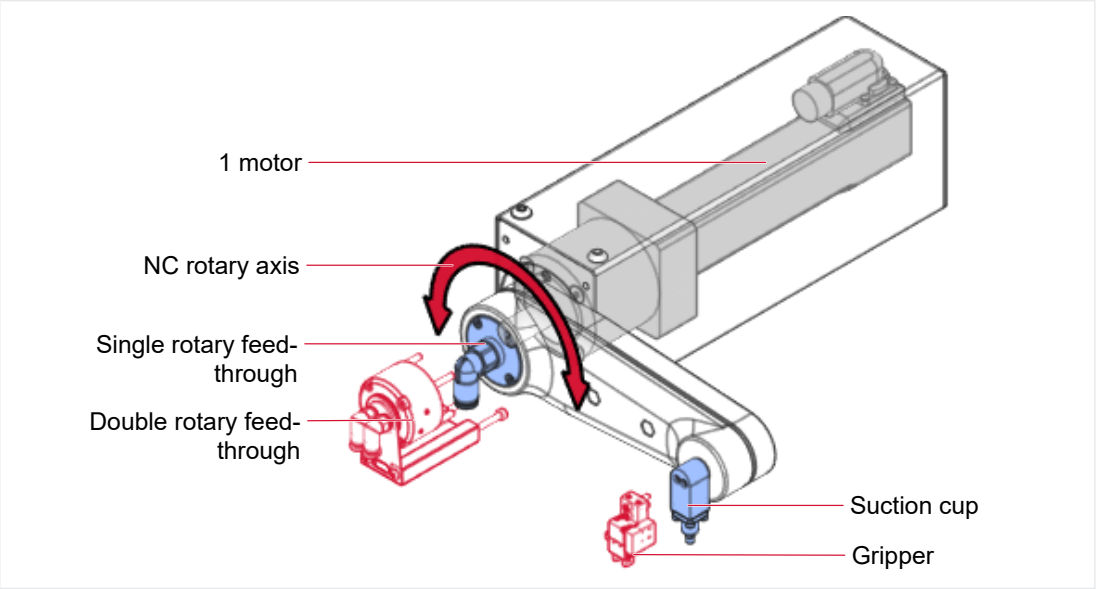

Fig. 1: Overview: NC swivel axis, passive rotary axis

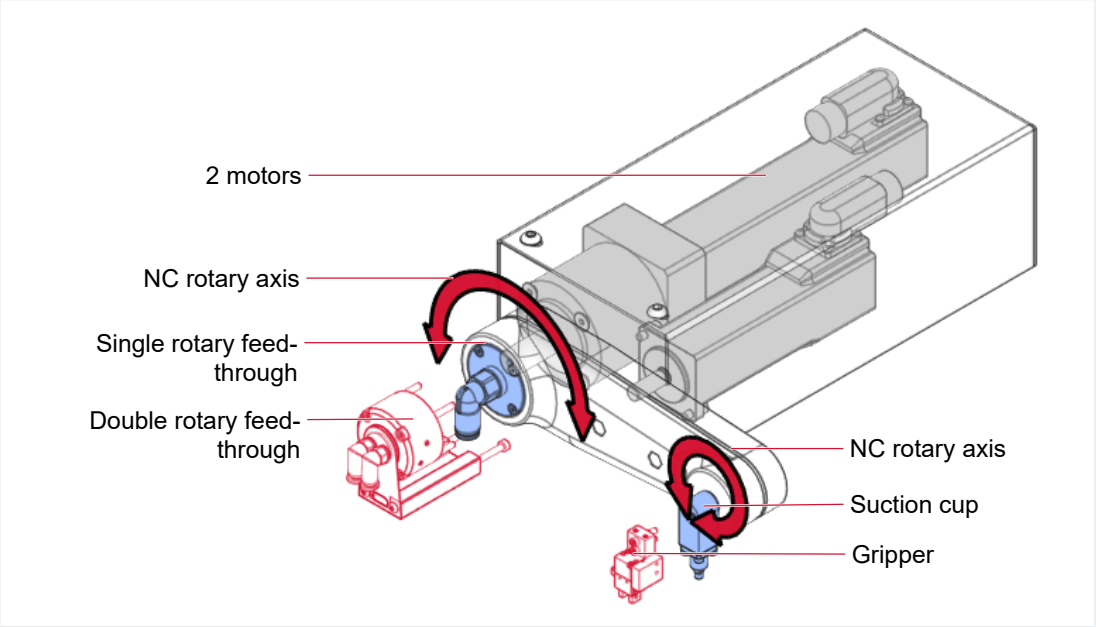

Fig. 2: Overview: NC swivel axis, NC rotary axis

3.1.1 Exploded-view drawing

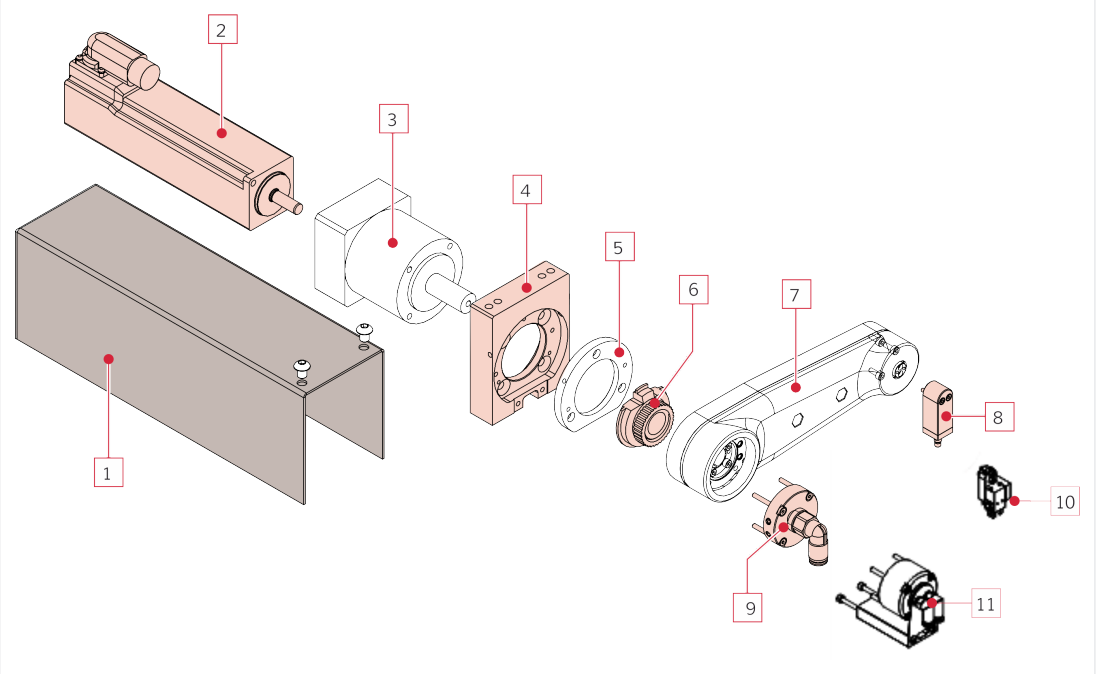

Fig. 3: Exploded-view drawing NC swivel axis, passive rotary axis

1	Cover sheet metal	2	Servomotor with brake and connector for the swivel axis
3	Planetary gear	4	Planetary gear
5	Cover clamping ring	6	Clamping disc and single disc
7	Swivel arm	8	Suction cup (suction cup option)
9	Single rotary feed-through (suction cup option)	10	Gripper (gripper option)
11	Double rotary feed-through (gripper option)		

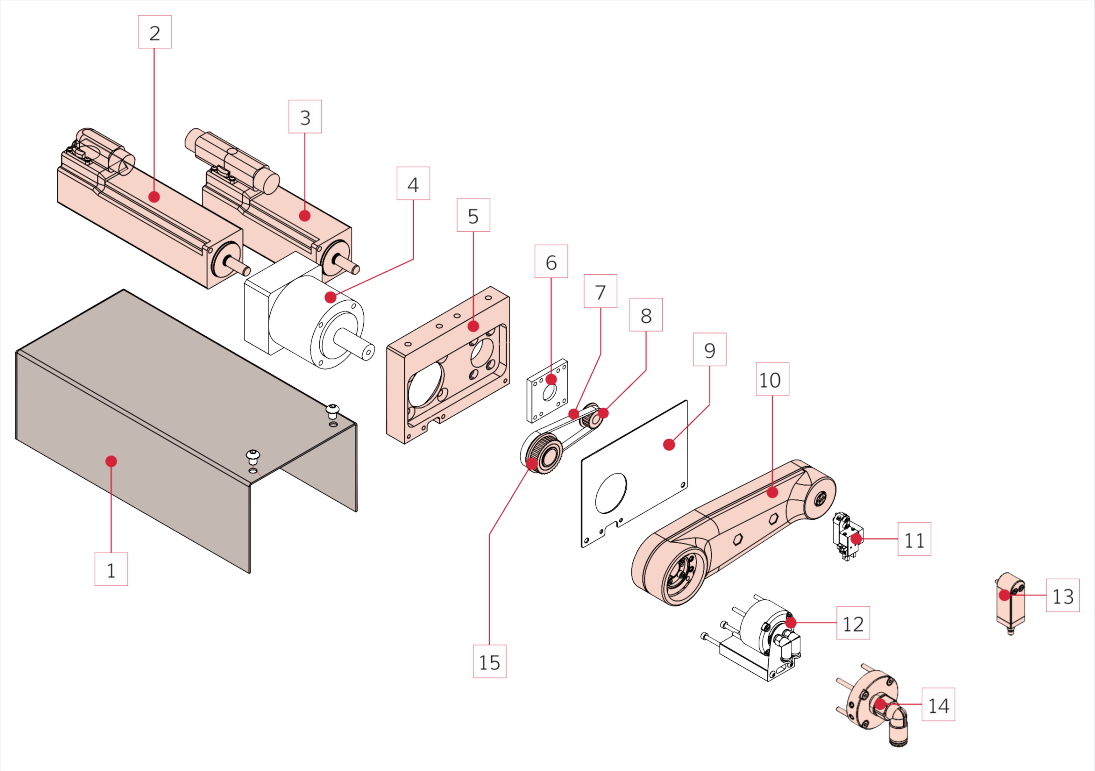

Fig. 4: Exploded-view drawing NC swivel axis, NC rotary axis

1	Cover sheet metal	2	Servomotor with brake and connector for the swivel axis
3	Servomotor with brake and connector for the rotary axis	4	Planetary gear
5	Mounting plate	6	Intermediate flange
7	Toothed belt	8	Intermediate flange
9	Cover plate	10	Swivel arm
11	Gripper (gripper option)	12	Double rotary feed-through (gripper option)
13	Suction cup (suction cup option)	14	Single rotary feed-through (suction cup option)
15	Toothed belt		

3.1.2 Dimensions and fixing points

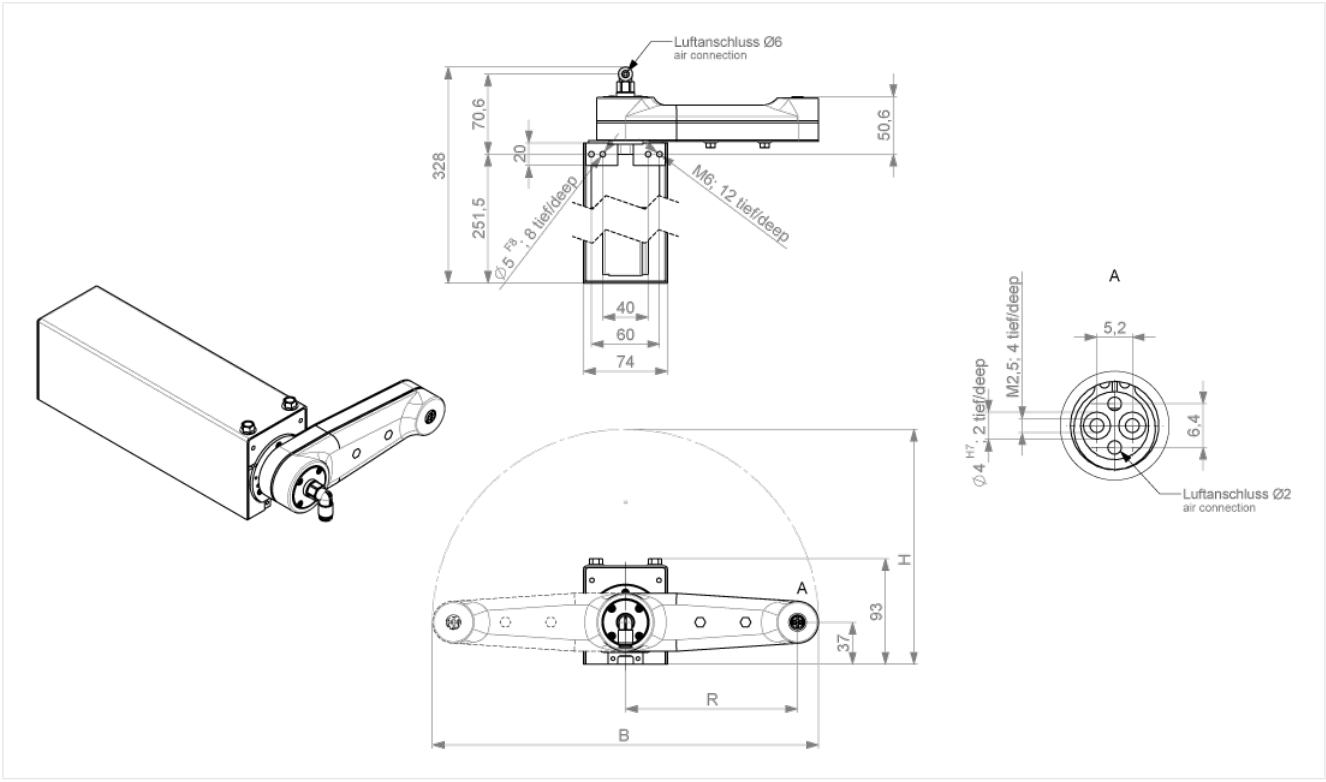

Fig. 5: Dimensions and fixing points: NC swivel axis, passive rotary axis

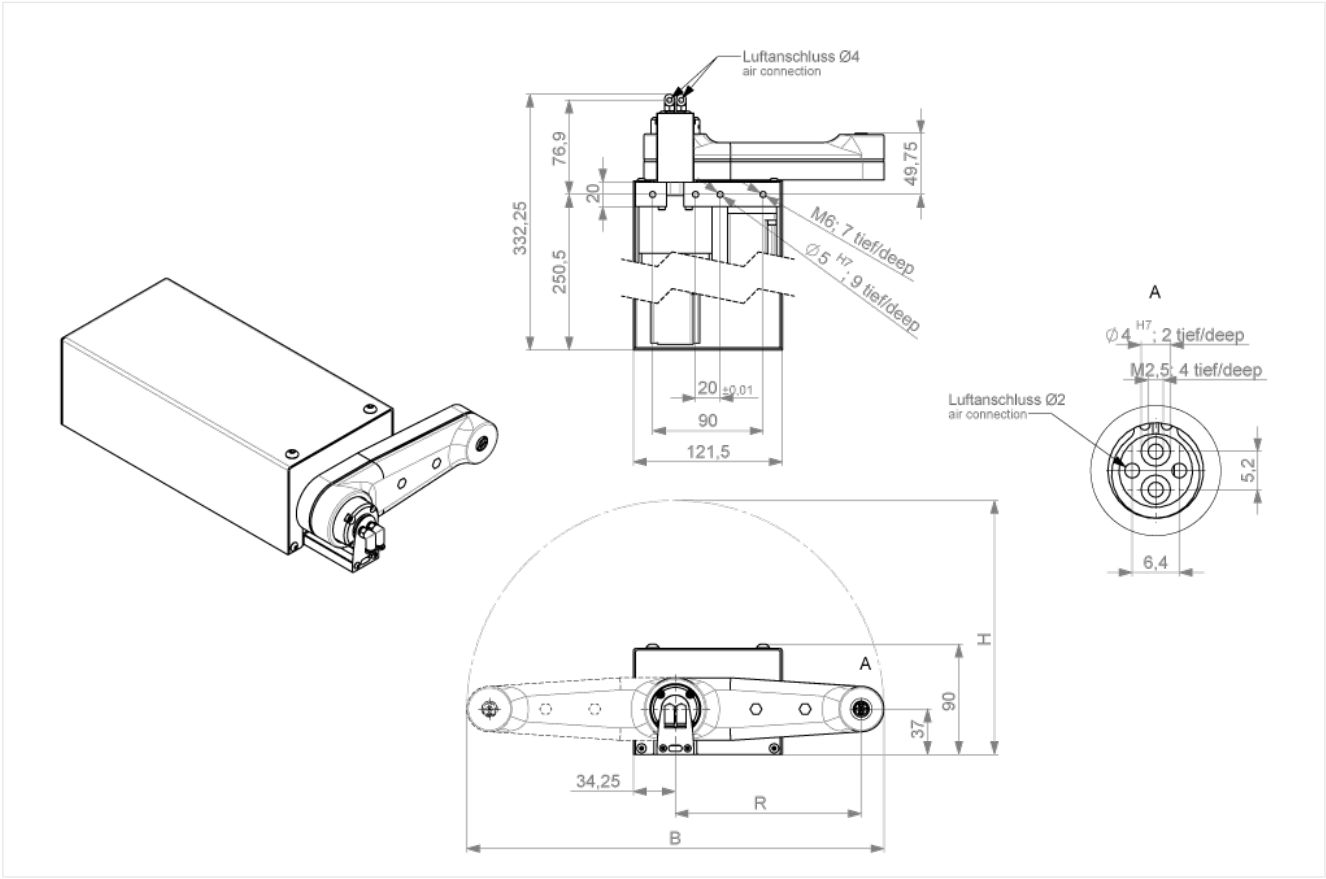

Fig. 6: Dimensions and fixing points: NC swivel axis, NC rotary axis

3.2 Blowing air or vacuum flow

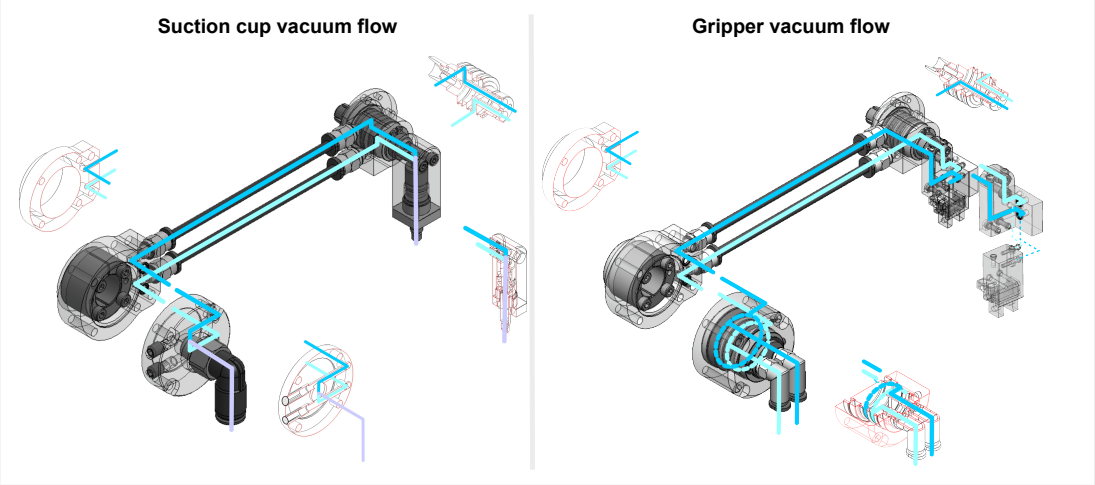

Fig. 7: Blowing air or vacuum flow

3.3 Technical data and ambient conditions

A type plate with (further) data is located on the machine / product.

Environmental conditions

Operating temperature	0 - 60°C
Change in temperature	maximum 10°C / h
Relative humidity	15 - 80% indoor, no condensation
Air pressure	(860...1060) hPa
Storage temperature	-20 to + 60°C

Tab. 3: Environmental conditions

Technical data

	miniSPIN 87	miniSPIN 151.5
Swivel radius	87	151.5
Mass moment of inertia incl. gear unit [kg-cm²]	0.128	0.268
Repeatability [mm]	0.05	0.05
Working range of swivel axis	180° degrees + - 5° degrees	180° degrees + - 5° degrees
Gear ratio of swivel axis	8:1	8:1
Working range of rotary axis	360° degrees	360° degrees
Gear ratio of rotary axis	9:16	9:16
Height [mm]	148.25	207
Width [mm]	222.5	340
Encoder system	Absolute encoder	Absolute encoder
Max. payload [g]	20 g (up to 100 g on request)	20 g (up to 100 g on request)

	miniSPIN 87	miniSPIN 151.5
Movement time for 180° (20g) [ms]	120	120
Weight (1 motor) [kg]	1.78	1.84
Weight (2 motors) [kg]	2.25	2.31

Tab. 4: Technical data

3.4 Scope of delivery and accessories

Scope of delivery	Required accessories	Optional accessories
■ miniSPIN NC swivel axis, passive rotary axis	■ 1 motor ■ Suction cup / gripper ■ Single* / double** rotary feed-through	■ Initiators (limit switches and/or reference switches)
■ miniSPIN NC swivel axis, NC rotary axis	■ 2 motors ■ Suction cup / gripper ■ Single* / double** rotary feed-through	

Tab. 5: Scope of delivery and accessories

* with option: suction cup, ** with option: gripper

If other actuators/motors are to be used, contact IEF-Werner GmbH.

3.5 Type code

miniSPIN xxx-NCx-Ax-Cx-Ox

Element	Description	
xxx	Lever length in mm	■ 87 ■ 151.5
NCx	Numerical control	■ 1 = NC swivel axis, passive rotary axis ■ 2 = NC swivel axis, NC rotary axis
Ax	Air	■ 1 = merged air duct for suction applications ■ 2 = two separate air ducts for gripper applications
Cx	Cover	■ 0 = No motor cover ■ 1 = Motor cover (standard)
Ox	Options	■ 1 = Suction cup (standard) ■ 2 = Gripper (standard)

4 Transport

Unpacking

- Immediately after delivery, check the machine/product for transport damage.
- Notify the shipping company, insurance company and manufacturer immediately of any transport damage.
- Leave machine/product unpackaged at room temperature for 24 hours after delivery. This ensures that any condensation present evaporates and all components are at a temperature appropriate for operation.
- Dispose of packaging in accordance with the requirements applicable nationally.

Storage

Observe ambient conditions, see Technical data and ambient conditions [▶ 13].

5 Installation

5.1 Mechanical assembly

The following points must be complied with during assembly:

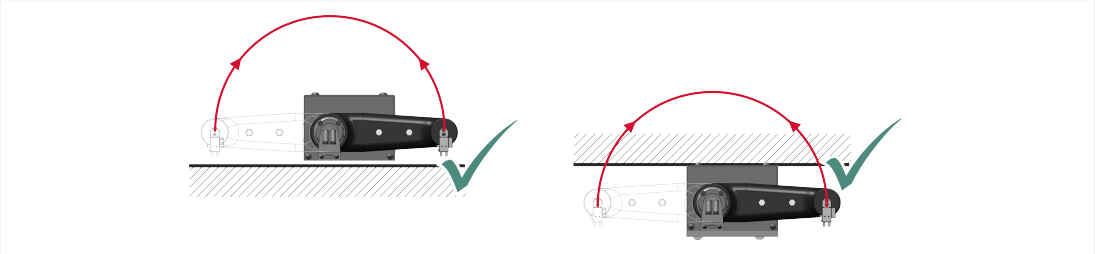

Fig. 8: Installation position

Installation position	Horizontal
Flatness of the mounting surface	0.1 mm/m²
Further points	■ Do not drill any additional holes in the component. ■ The component must be mounted without distortion and bending. ■ Ensure that no collisions are possible in the movement area.

Threaded torque for screw connections [Nm]	Screw / strength class	M2.5	M3	M4	M5	M6	M8	M10	M12
	8.8	0.5	1.1	2.5	5	8.5	21	41	71
	12.9	0.59	2.1	4.9	9.5	16.5	40	79	135

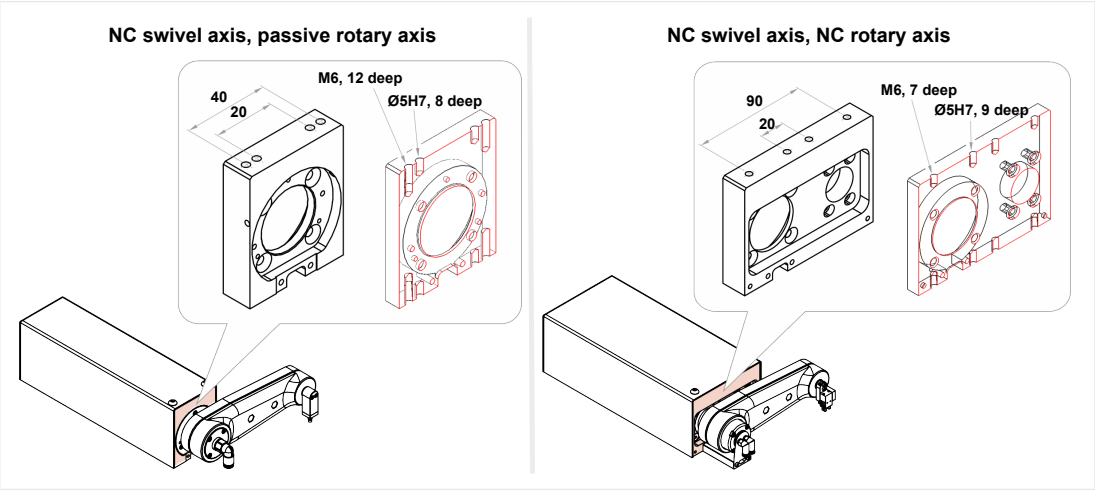

Fig. 9: Borehole pattern

▶ Fix the component to the mounting surface according to the drilling pattern.

5.2 Connecting electrically and pneumatically

⚠ WARNING

Risk of serious injury due to electrical voltage and pneumatic pressure.

- ▶ Before carrying out the following work, depressurise the relevant machine part and secure it against restarting.

Notes

- Only motors approved for the specific application (travel speed, acceleration, load) by IEF-Werner GmbH may be fitted. If you have any questions, contact the IEF-Werner GmbH service.
- ▶ Fasten the motor without distortion.
- ▶ After installation, connect the motors according to the motor data sheet.
- ▶ Connect pneumatics, see also Blowing air or vacuum flow [▷ 13].

6 Commissioning

This incomplete machine is only intended to be installed in or joined together with other (incomplete) machines or equipment in order to form, together with other machines or equipment, a complete machine within the meaning of the Machinery Directive. Only after a conformity assessment procedure, in accordance with the Machinery Directive, has been carried out for the complete machine, may it be put into operation.

⚠ WARNING

Danger of crushing due to rotational movement of the swivel arm and/or the actuator.

- ▶ Protect the movement range from tampering.
- ▶ Keep the movement range free of foreign objects.
- ▶ Install appropriate protective devices (e.g. protective grids).

Before commissioning, check whether:

- all electrical connections and mechanical connections are carried out according to regulations.
- the protective conductor or protective earthing is properly established.
- contact protection measures are taken for moving and live parts.

7 Maintenance

7.1 Spare parts and wear parts

Only use faultless, suitable tools and original spare parts or series production parts expressly approved by the manufacturer for repairs. See the supplied lists of spare/replacement parts for information and provision these parts according to requirements and experience.

If necessary, contact our customer service:

IEF-Werner GmbH

Telephone: +49 7723 / 925 - 222**,** E-mail: service@ief-werner.de

7.2 Preparing the product for maintenance tasks

Before maintenance, servicing, disassembly and troubleshooting work, the product must be put into a safe condition.

Required qualifications:

Specialist/maintenance technician

⚠ WARNING

Serious risk of injury due to electrical voltage.

- ▶ Before carrying out the following work, de-energise the relevant machine part and secure it against restarting.

⚠ CAUTION

Risk of burns due to hot surfaces!

The motor housing and adjacent assemblies can heat up and cause burns when touched.

- ▶ Let motor housing and adjacent assemblies cool down before touching them.

- ▶ the relevant machine part is de-energised and depressurised.
- ▶ Ensure that dangerous machine movements are not possible due to stored energy.
- ▶ Carry out maintenance according to the engine manufacturer's documentation.

8 Fault rectification

The troubleshooting measures described here are only intended to provide assistance to qualified specialists. Contact the manufacturer's service department, if necessary.

Exploded-view drawings and parts lists can be downloaded from the homepage.

- Preparing the product for maintenance tasks, see Preparing the product for maintenance tasks [▷ 19].
- If the components are purchased parts, the documentation of the respective manufacturer (supplier/component documentation) must be complied with before the tasks are carried out.

Fault	Reason	Fault rectification
Lever arm loses position	Torque transmission from motor shaft to lever arm not guaranteed	Tighten the clamping set.
	Encoder system of the motor defective	Replace motor.
Lever arm sinks in de-energised state	Motor brake defective	Replace motor.
Lever arm swings	Payload too high	Maximum payload (see Technical data and ambient conditions [▷ 13]) must not be exceeded and must be reduced if necessary.
	Controller parameters not optimally set	Optimise the PID controller of the servo amplifier.
Gripper/suction cup loses position	Toothed belt not sufficiently tensioned	Tension the toothed belt via the tension pulley.
	Toothed belt overstretched or defective	Replace toothed belt.
Component is not suctioned/gripped	Gripper/suction cup defective	Replace defective gripper/suction cup.
	No pneumatic air/vacuum present	Check compressed air/vacuum supply.
Vacuum is not built up	Leakage in compressed air/vacuum guide	Check individual pneumatic components for leakage.
	Vacuum supply not sufficient	Check vacuum supply, ensure vacuum.
	Press sleeve is not perpendicular to the component	Align the gripper/suction cup.

9 Dismantling and disposal

- Preparing the product for maintenance tasks, see Preparing the product for maintenance tasks [▷ 19].
- Remove electrical installations.
- Remove the motor and attachment kit.
- Remove the fastening elements.

Disposal

Dispose of the product and packaging in an environmentally sound manner in accordance with the applicable regulations for recycling.

10 Declaration of Incorporation

Manufacturer	IEF-Werner GmbH Wendelhofstr. 6 78120 Furtwangen, Germany
Incomplete machine (designation)	miniSPIN from year of manufacture 10/2022
Authorized documentation representative	IEF-Werner GmbH

The manufacturer hereby confirms that the incomplete machine named above complies with the following essential requirements of the Machinery Directive 2006/42/EC.
The technical documentation has been drawn up in accordance with Annex VII, Part B and may be sent to the national authorities in electronic form upon substantiated request.
The following (harmonised) standards have been applied:

- DIN EN ISO 12100:2011-03
  Safety of machinery – General principles for design – Risk assessment and risk reduction
- DIN EN ISO 13857:2020-04:
  Safety of machinery – Safety distances to prevent hazard zones from being reached by the upper and lower limbs
- DIN EN ISO 13849-1:2016-06
  Safety of machinery – Safety-related parts of control systems – Part 1: General principles for design
- DIN EN ISO 13849-2:2013-02
  Safety of machinery – Safety-related parts of control systems – Part 2: Validation
- DIN EN 60204-1:2019-06
  Safety of machinery – electrical equipment of machines – part 1: General requirements
- DIN EN ISO 13854:2020-01
  Safety of machinery – minimum gaps to avoid crushing of parts of the human body
- DIN EN ISO 13732-1:2008-12
  Ergonomics of the thermal environment – Methods for the assessment of human responses to contact with surfaces – Part 1: Hot surfaces
- DIN EN ISO 14120:2016-05
  Safety of machinery – Safety distances to prevent hazard zones from being reached by the upper and lower limbs

The partly completed machinery must not be put into service until the machinery into which it is to be incorporated has been declared in conformity with the provisions of the Machinery Directive 2006/42/EC.

Furtwangen, ##.##.2###

Stefan Deck (Managing Director)

Annex to the Declaration of Incorporation

Essential health and safety requirements according to the Machinery Directive 2006/42/EC, Annex I

Relevant

x The request is relevant.

- The request is not relevant.

Fulfilled

x The request is fulfilled.

- The request is not fulfilled.

		Relevant	Fulfilled
1.1	**General information**		
1.1.1	Definitions	X	X
1.1.2	Principles for the integration of safety	X	X
1.1.3	Materials and products	X	X
1.1.4	Illumination	-	-
1.1.5	Design of the machine with regard to handling	X	X
1.1.6	Ergonomics	-	-
1.1.7	Operator stations	-	-
1.1.8	Seats	-	-
1.2	**Controllers and command devices**		
1.2.1	Safety and reliability of controllers	X	-
1.2.2	Control devices	X	-
1.2.3	Start-up	X	-
1.2.4	Shutdown		
1.2.4.1	Normal shutdown	X	-
1.2.4.2	Shutdown for operational reasons	X	-
1.2.4.3	Emergency shutdown	X	-
1.2.4.4	Machinery in its entirety	X	-
1.2.5	Selection of control modes or operating modes	X	-
1.2.6	Power supply failure	X	-
1.3	**Protective measures against mechanical hazards**		
1.3.1	Risk of loss of stability	-	-
1.3.2	Risk of breakage during operation	X	X
1.3.3	Risks due to falling objects or ejected objects	X	-
1.3.4	Risks due to surfaces, edges and corners	X	X
1.3.5	Risks due to multiple combined machines	-	-
1.3.6	Risks due to changes in the use conditions	-	-
1.3.7	Risks due to moving parts	X	X
1.3.8	Selection of guards and protective devices to protect against risks from moving parts		
1.3.8.1	Moving parts of the force transmission	X	X
1.3.8.2	Moving parts involved in the work process	X	X
1.3.9	Risk of uncontrolled movements	X	X
1.4	**Requirements for guards and protective devices**		

		Relevant	Fulfilled
1.4.1	General requirements	X	X
1.4.2	Special requirements for guards		
1.4.2.1	Fixed guards	X	-
1.4.2.2	Movable guards with interlock	X	-
1.4.2.3	Adjustable guards and protective devices that restrict access	-	-
1.4.3	Special requirements for protective devices	X	-
1.5	**Risks due to other hazards**		
1.5.1	Electrical energy supply	X	X
1.5.2	Static electricity	X	X
1.5.3	Non-electrical energy supply	-	-
1.5.4	Installation faults	X	X
1.5.5	Extreme temperatures	-	-
1.5.6	Fire	X	X
1.5.7	Explosion	-	-
1.5.8	Noise	-	-
1.5.9	Vibrations	-	-
1.5.10	Radiation	-	-
1.5.11	External radiation	-	-
1.5.12	Laser radiation	-	-
1.5.13	Emissions of hazardous materials and substances	-	-
1.5.14	Risk of being enclosed within the machine	-	-
1.5.15	Risk of slipping, tripping and falling	-	-
1.5.16	Lightning strike	-	-
1.6	**Maintenance**		
1.6.1	Machine maintenance	X	X
1.6.2	Access to the operating stations and the servicing points for maintenance work	-	-
1.6.3	Disconnection from energy sources	X	X
1.6.4	Interventions by operating personnel	X	X
1.6.5	Cleaning of internal machine parts	X	X
1.7	**Information**		
1.7.1	Information and warnings on the machine		
1.7.1.1	Information and information devices	X	X
1.7.1.2	Warning devices	-	-
1.7.2	Warning of residual risks	X	-
1.7.3	Machine markings	X	-
1.7.4	Operating instructions		
1.7.4.1	General principles for the drafting of the operating instructions	X	X
1.7.4.2	Content of the operating instructions	X	X
1.7.4.3	Sales literature	X	X

11 UKCA Declaration of incorporation

Manufacturer	IEF-Werner GmbH Wendelhofstr. 6 78120 Furtwangen, Germany

We, IEF-Werner GmbH, declare under our sole responsibility that the product

Product	miniSPIN from year of manufacture 10/2022

complies with the essential requirement of the relevant regulation, as shown

- **Supply of Machinery (Safety) Regulations 2008 No. 1597**

The following designated standards and technical specifications have been applied to achieve presumption of conformity

- DIN EN ISO 12100:2011-03
  Safety of machinery – General principles for design – Risk assessment and risk reduction
- DIN EN ISO 13857:2020-04:
  Safety of machinery – Safety distances to prevent hazard zones from being reached by the upper and lower limbs
- DIN EN ISO 13849-1:2016-06
  Safety of machinery – Safety-related parts of control systems – Part 1: General principles for design
- DIN EN ISO 13849-2:2013-02
  Safety of machinery – Safety-related parts of control systems – Part 2: Validation
- DIN EN 60204-1:2019-06
  Safety of machinery – electrical equipment of machines – part 1: General requirements
- DIN EN ISO 13854:2020-01
  Safety of machinery – minimum gaps to avoid crushing of parts of the human body
- DIN EN ISO 13732-1:2008-12
  Ergonomics of the thermal environment – Methods for the assessment of human responses to contact with surfaces – Part 1: Hot surfaces
- DIN EN ISO 14120:2016-05
  Safety of machinery – Safety distances to prevent hazard zones from being reached by the upper and lower limbs

The following person confirms that the above information is correct to the best of his knowledge and belief and that he can be contacted at the contact details provided:

Name	Andrew Mason RARUK Automation 14 Old Bridge Way, Shefford, Bedfordshire, SG17 5HQ.

The partly completed machinery must not be put into service until the machinery into which it is to be incorporated has been declared in conformity with the provisions of the **Supply of Machinery (Safety) Regulations 2008 No. 1597**.

Furtwangen, 16/11/2022

Stefan Deck (Managing Director)

Annex to the Declaration of Incorporation

Essential health and safety requirements according to the Machinery Directive 2006/42/EC, Annex I

Relevant

x The request is relevant.

- The request is not relevant.

Fulfilled

x The request is fulfilled.

- The request is not fulfilled.

		Relevant	Fulfilled
1.1	**General information**		
1.1.1	Definitions	X	X
1.1.2	Principles for the integration of safety	X	X
1.1.3	Materials and products	X	X
1.1.4	Illumination	-	-
1.1.5	Design of the machine with regard to handling	X	X
1.1.6	Ergonomics	-	-
1.1.7	Operator stations	-	-
1.1.8	Seats	-	-
1.2	**Controllers and command devices**		
1.2.1	Safety and reliability of controllers	X	-
1.2.2	Control devices	X	-
1.2.3	Start-up	X	-
1.2.4	Shutdown		
1.2.4.1	Normal shutdown	X	-
1.2.4.2	Shutdown for operational reasons	X	-
1.2.4.3	Emergency shutdown	X	-
1.2.4.4	Machinery in its entirety	X	-
1.2.5	Selection of control modes or operating modes	X	-
1.2.6	Power supply failure	X	-
1.3	**Protective measures against mechanical hazards**		
1.3.1	Risk of loss of stability	-	-
1.3.2	Risk of breakage during operation	X	X
1.3.3	Risks due to falling objects or ejected objects	X	-
1.3.4	Risks due to surfaces, edges and corners	X	X
1.3.5	Risks due to multiple combined machines	-	-
1.3.6	Risks due to changes in the use conditions	-	-
1.3.7	Risks due to moving parts	X	X
1.3.8	Selection of guards and protective devices to protect against risks from moving parts		
1.3.8.1	Moving parts of the force transmission	X	X
1.3.8.2	Moving parts involved in the work process	X	X
1.3.9	Risk of uncontrolled movements	X	X
1.4	**Requirements for guards and protective devices**		

		Relevant	Fulfilled
1.4.1	General requirements	X	X
1.4.2	Special requirements for guards		
1.4.2.1	Fixed guards	X	-
1.4.2.2	Movable guards with interlock	X	-
1.4.2.3	Adjustable guards and protective devices that restrict access	-	-
1.4.3	Special requirements for protective devices	X	-
1.5	**Risks due to other hazards**		
1.5.1	Electrical energy supply	X	X
1.5.2	Static electricity	X	X
1.5.3	Non-electrical energy supply	-	-
1.5.4	Installation faults	X	X
1.5.5	Extreme temperatures	-	-
1.5.6	Fire	X	X
1.5.7	Explosion	-	-
1.5.8	Noise	-	-
1.5.9	Vibrations	-	-
1.5.10	Radiation	-	-
1.5.11	External radiation	-	-
1.5.12	Laser radiation	-	-
1.5.13	Emissions of hazardous materials and substances	-	-
1.5.14	Risk of being enclosed within the machine	-	-
1.5.15	Risk of slipping, tripping and falling	-	-
1.5.16	Lightning strike	-	-
1.6	**Maintenance**		
1.6.1	Machine maintenance	X	X
1.6.2	Access to the operating stations and the servicing points for maintenance work	-	-
1.6.3	Disconnection from energy sources	X	X
1.6.4	Interventions by operating personnel	X	X
1.6.5	Cleaning of internal machine parts	X	X
1.7	**Information**		
1.7.1	Information and warnings on the machine		
1.7.1.1	Information and information devices	X	X
1.7.1.2	Warning devices	-	-
1.7.2	Warning of residual risks	X	-
1.7.3	Machine markings	X	-
1.7.4	Operating instructions		
1.7.4.1	General principles for the drafting of the operating instructions	X	X
1.7.4.2	Content of the operating instructions	X	X
1.7.4.3	Sales literature	X	X

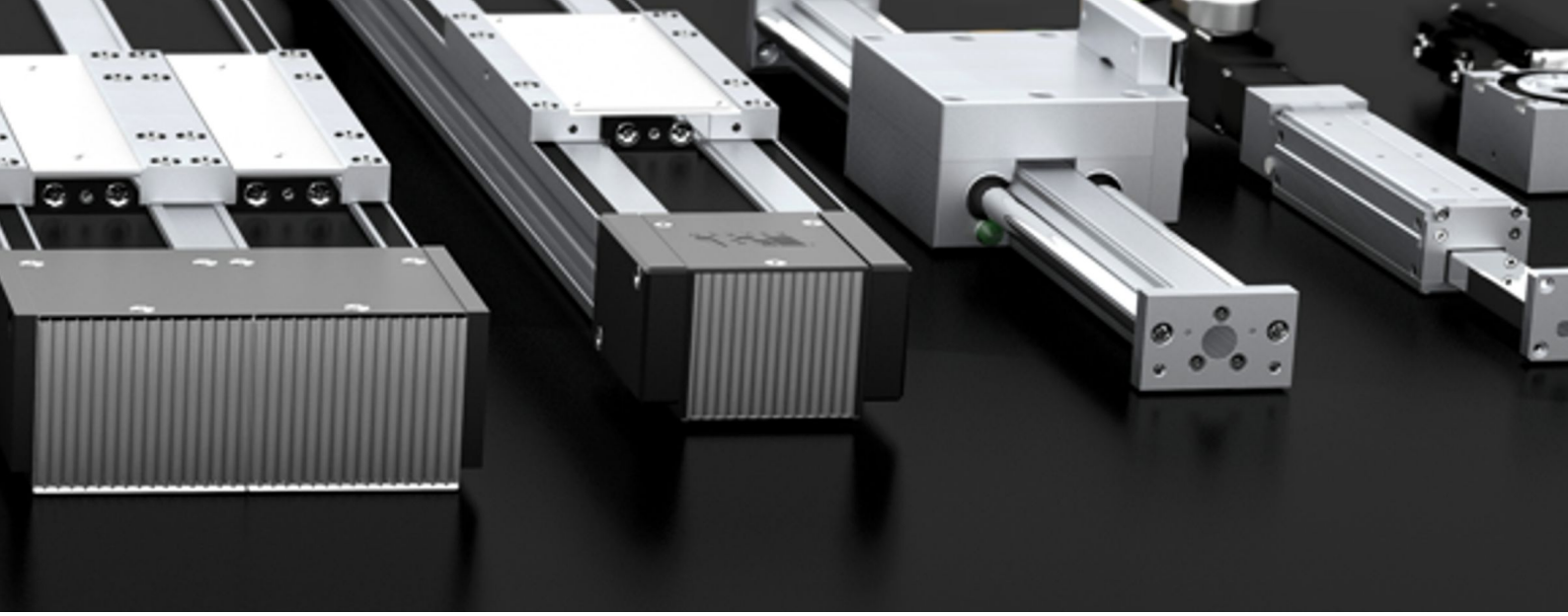

IEF-Werner GmbH
Wendelhofstraße 6
Germany-78120 Furtwangen
Telephone: +49 7723-925-0
info@ief-werner.de